Audrina K31600

Shown in Enello Cement and Dala Mineral. | Loose Back | Matching group available (page 4).

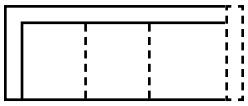

K31600L/R CRNS
Corner Sofa
W95″ D37″ H31″
2 Pillows

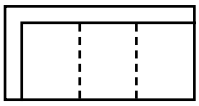

K31600L/R S
One Arm Sofa
W82″ D37″ H31″
1 Pillow

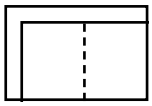

K31600L/R LS
One Arm Loveseat
W56″ D37″ H31″
1 Pillow

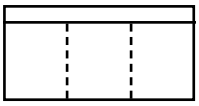

K31600 AS
Armless Sofa
W77″ D37″ H31″

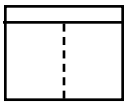

K31600 ALS
Armless Loveseat
W52″ D37″ H31″

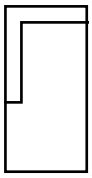

K31600L/R CHASE
One Arm Chaise
W31″ D66″ H31″
1 Pillow

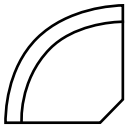

K31600 WEDGE
90° Wedge
W64″ D40″ H31″
1 Pillow

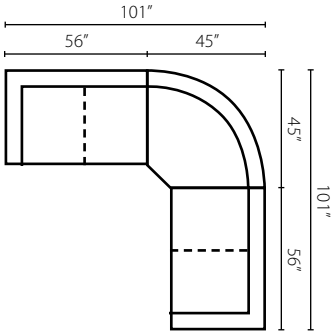

Configuration A

K31600L LS Loveseat
K31600 WEDGE 90° Wedge
K31600R LS Loveseat

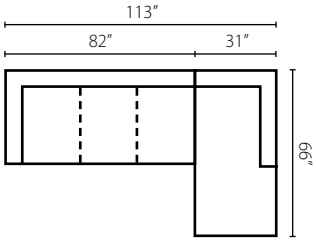

Configuration B

K31600L S One Arm Sofa
K31600R CHASE One Arm Chaise

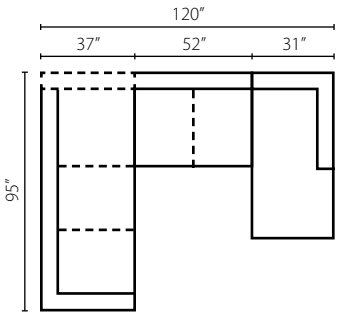

Configuration C

K31600L CRNS Corner Sofa
K31600 ALS Armless Loveseat
K31600R CHASE One Arm Chaise

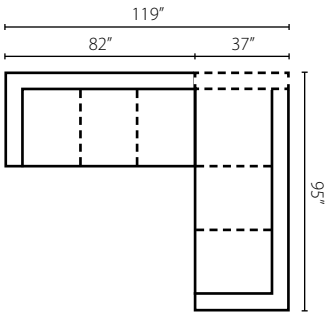

Configuration D

K31600L S One Arm Sofa
K31600R CRNS Corner Sofa